EE 505
Lecture 9

- Statistical Circuit Modeling

Review from last lecture

Recall from previous lecture

How important is statistical analysis?

Example: 7-bit FLASH ADC with R-string DAC

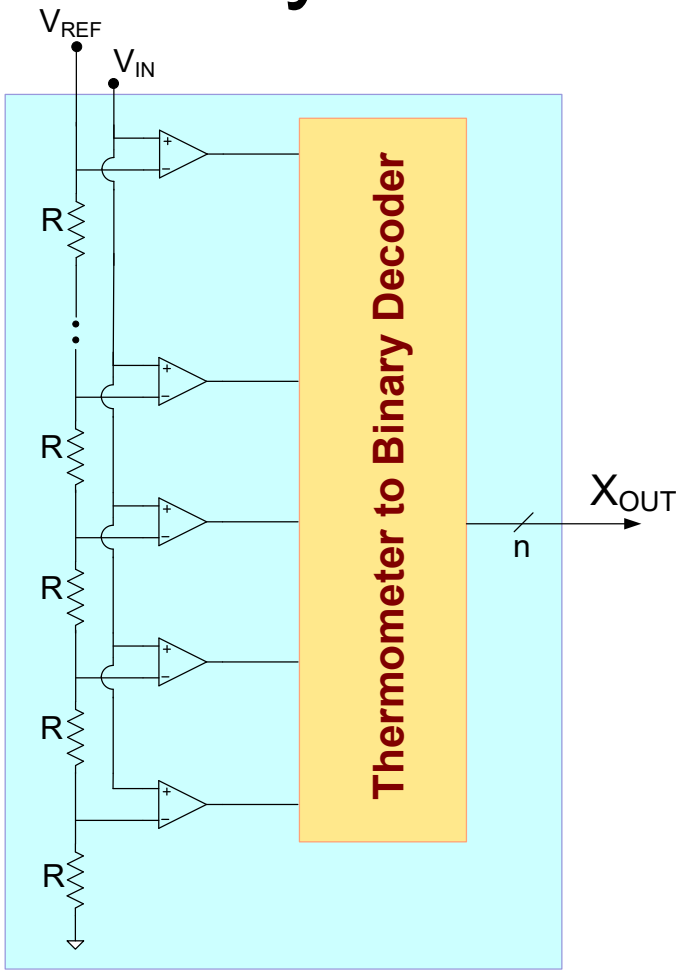

Assume R-string is ideal, V_{REF}=1V and V_{OS} for each comparator must be at most +/- ½ LSB

Case 1

Standard deviation is 5mV

P_{COMP} = 0.565

$Y_{ADC}=3.2 \bullet 10^{-32}$

Case 2

Standard deviation is 1mV

P_{COMP} = 0.999904

$Y_{ADC}=0.988$

Statistics play a key role in the performance and consequently yield of a data converter

Statistical Analysis Strategy

Will first focus on statistical characterization of resistors, then extend to capacitors and transistors

Every resistor R can be expressed as

$$R=R_N+R_{RP}+R_{RW}+R_{RD}+R_{RGRAD}+R_{RL}$$

where R_N is the nominal value of the resistor and the remaining terms are all random variables

R_{RP}: Random process variations
R_{RW}: Random wafer variations
R_{RD}: Random die variations
R_{RGRAD}: Random gradient variations
R_{RL}: Local Random Variations

- Data Converters (ADCs and DACs) are ratiometric devices and performance often dominated by ratiometric device characteristics (e.g. matching)
- Many other AMS functions are dependent upon dimensioned parameters and often not dependent upon matching characteristics

Statistical Analysis Strategy

$$R=R_N+R_{RP}+R_{RW}+R_{RD}+R_{RGRAD}+R_{RL}$$

R_{RP}: Random process variations
R_{RW}: Random wafer variations
R_{RD}: Random die variations
R_{RGRAD}: Random gradient variations
R_{RL}: Local Random Variations

$$\sigma_{RP} >> \sigma_{RW} >> \sigma_{RD}$$

- All variables globally uncorrelated
- For good common-centroid layouts gradient effects can be neglected
- Local random variations often much smaller than R_{RP}, R_{RW}, and R_{RD} though not necessarily
- Area dominantly determines σ_{RL}, but area has little effect on the other variables
- At the resistor-level on a die, R_{RP}, R_{RW} and R_{RD} highly correlated thus cause no mismatch
- Major challenge in data converter design is managing R_{RL} effects
- All zero mean and approximately Gaussian (truncated)
- For dimensioned performance characteristics (e.g. band edge of filter), R_{RP}, R_{RW} and R_{RD} are dominant and R_{RGRAD} and R_{RL} typically secondary

For notational convenience, assume $R=R_N+R_R$

R_N includes R_{RP}, R_{RW} and R_{RD}, R_{GRAD} neglected, $R_R=R_{RL}$

Resistor Characterization

Resistors are generally made of thin films of conductive or semiconductor materials

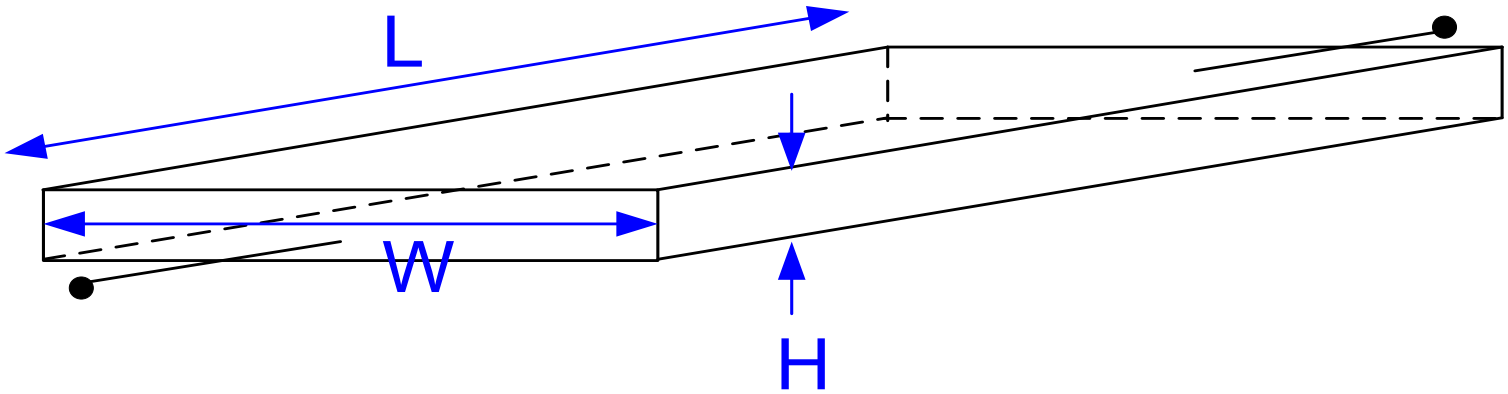

Generally h is very small compared to L and W

Films are often characterized by Sheet Resistance

In the ideal case $$R=\rho\left(\frac{1}{H}\bullet\frac{L}{W}\right) = R_{\square}\left(\frac{L}{W}\right)$$

Resistor Characterization

Resistors are generally made of thin films of conductive or semiconductor materials

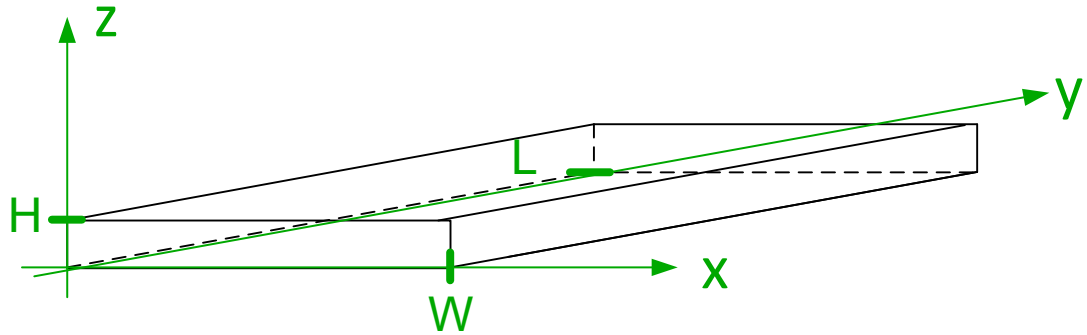

Film Characterized by Resistivity : $\rho(x,y,z)$

Films are often characterized by Sheet Resistance $R_{\square}(x,y)=\frac{\rho(x,y,z)}{H(x,y)}$

Ideally ρ(x,y,z) is independent of position as is $R_{\square}(x,y)$

In the ideal case $R=\rho\left(\frac{1}{H}\bullet\frac{L}{W}\right) = R_{\square}\left(\frac{L}{W}\right)$

Resistor Characterization

Resistors are generally made of thin films of conductive or semiconductor materials

Ideally

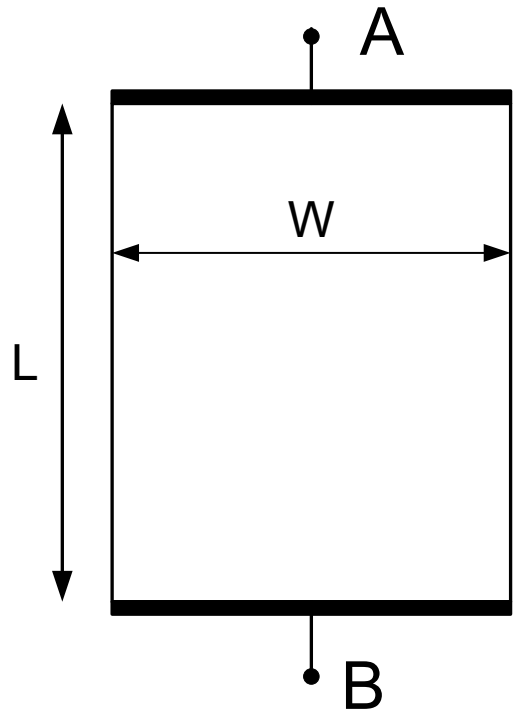

$$R = R_{\square}\left(\frac{L}{W}\right)$$

$$R_{\square} = \frac{\rho}{h}$$

Resistor Characterization

Ideally

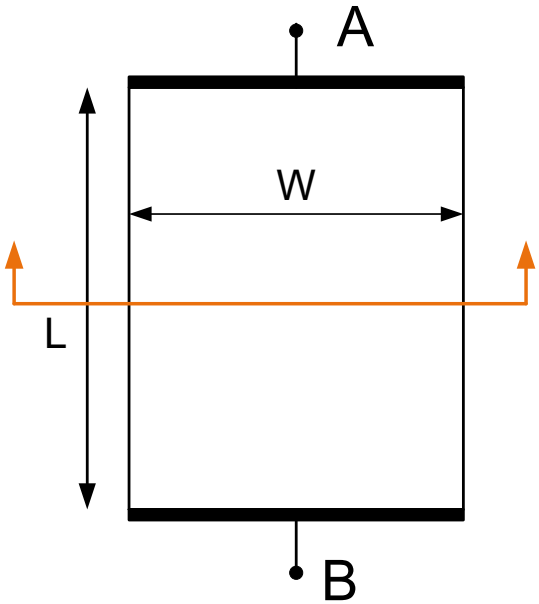

Actually

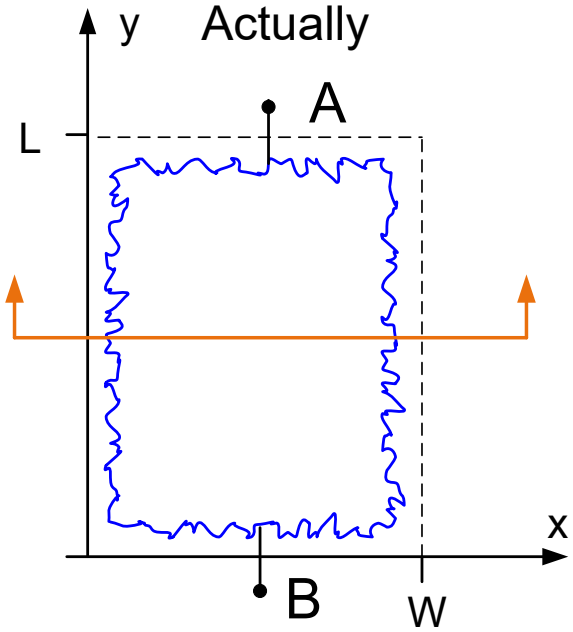

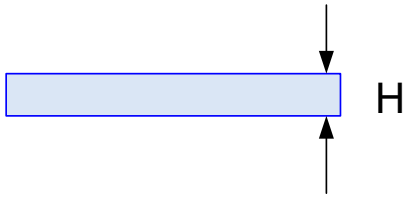

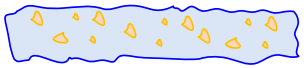

- Boundary of resistor varies with position
- ρ(x,y,z) varies with position
- Thickness (H(x,y)) varies with position
- Properties of resistor vary with position and temperature

Resistor Characterization

Ideally

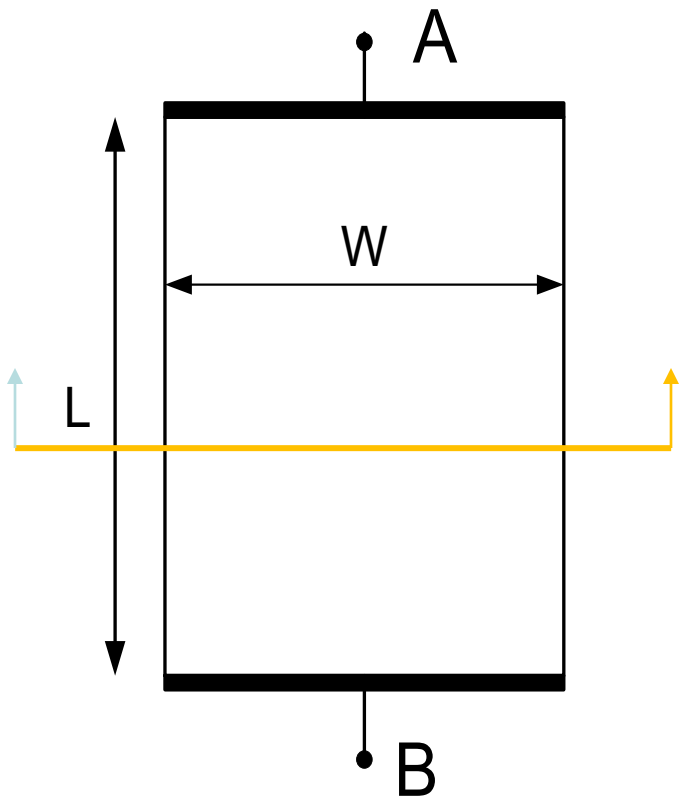

Actually

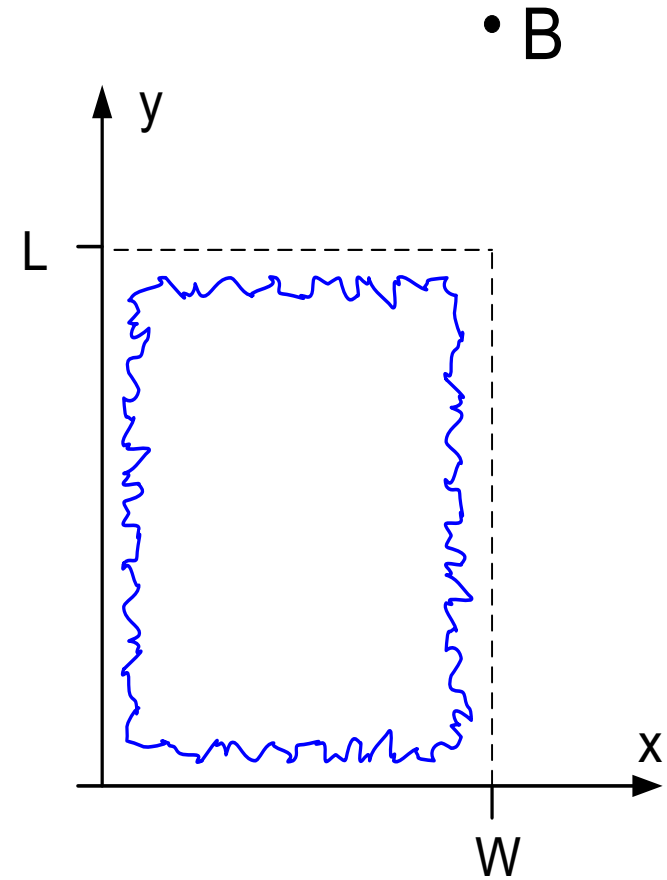

Boundary of resistor varies
ρ(x,y,z) varies with position

These variations will define R_R

Consider the following resistor circuits

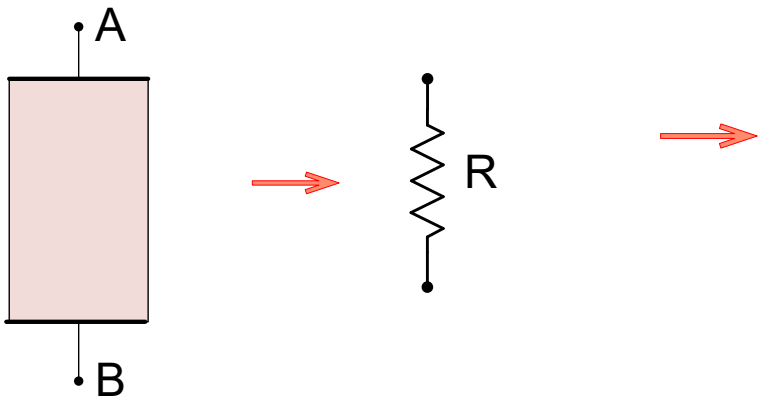

$R = R_N + R_R$

Statistical Model

mean $\mu_{R_R} = 0$

standard deviation σ_{R_R}

Distribution: Truncated Gaussian

$N \sim \left(0, \sigma_{R_R}\right)$

Series Resistor Connection (of two nominally identical devices)

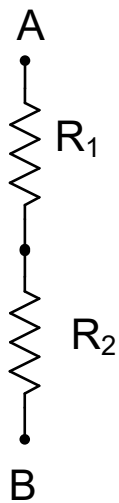

$R_1 = R_N + R_{R1}$

$R_2 = R_N + R_{R2}$

$R_{Ser2} = 2R_N + R_{R1} + R_{R2}$

Compare the standard deviation of the resistance of the series combination with that of a single resistor

Consider the following well-known Theorem:

Theorem: If $X_1, \ldots X_n$ are uncorrelated random variables and $a_1, .. a_n$ are real numbers, then the random variable Y defined by

$$Y = \sum_{i=1}^{n} a_i X_i$$

has mean and variance given by

$$\mu_Y = \sum_{i=1}^{n} a_i \mu_i$$

$$\sigma_Y = \sqrt{\sum_{i=1}^{n} (a_i \sigma_i)^2}$$

where μ_i and σ_i are the mean and variance of X_i for i=1,…n.

Series Resistor Connection

(of nominally identical devices)

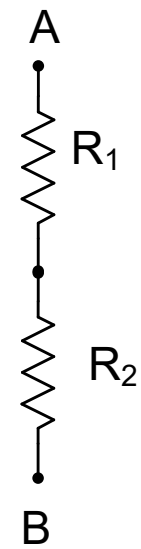

$$\left.\begin{aligned} R_1 &= R_N + R_{R1} \\ R_2 &= R_N + R_{R2} \end{aligned}\right\} \qquad R_{Ser2} = 2R_N + R_{R1} + R_{R2}$$

From Theorem $\sigma_{Ser2} = \sqrt{2}\sigma_{R_R}$

$$N \sim \left(0, \sqrt{2}\sigma_{R_R}\right)$$

Extending to n-resistors that are nominally identical

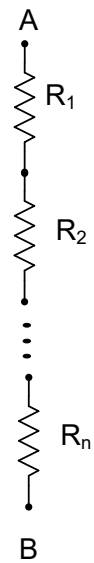

$$R_{Sern} = nR_N + \sum_{k=1}^{n} R_{Rk}$$

$$\sigma_{Sern} = \sqrt{n}\sigma_{R_R}$$

$$N \sim \left(0, \sqrt{n}\sigma_{R_R}\right)$$

Summary of Results

Structure	Nominal Resistance	Standard Deviation	Normalized Standard Deviation
R	R_N	σ_{R_R}	
Ser nR	nR_N	$\sqrt{n}\sigma_{R_R}$	

Note increasing the resistance by a factor of n increased the standard deviation by $\sqrt{n}$

Normalized Statistical Characterization

$$\sigma_{\frac{R}{R_N}} = ?$$

From previous theorem:

For single resistor R

$$\sigma^2_{\frac{R}{R_N}} = \frac{1}{R_N^2}\sigma^2_{R_R} \quad \Rightarrow \quad \sigma_{\frac{R}{R_N}} = \frac{1}{R_N}\sigma_{R_R}$$

For series connection of n ideally identical resistors (identical in both value and structure)

$$\mathrm{R}_{EQ} = \mathrm{nR}_N + \sum_{k=1}^{n} \mathrm{R}_{\mathrm{Rk}}$$

$$\mathrm{R}_{\mathrm{EQNor\,m}} = \frac{\mathrm{R}_{EQ}}{\mathrm{nR}_{\mathrm{N}}} = \frac{\mathrm{nR}_N + \sum_{k=1}^{n} \mathrm{R}_{\mathrm{Rk}}}{\mathrm{nR}_{\mathrm{N}}} = 1 + \frac{1}{n}\sum_{k=1}^{n}\frac{\mathrm{R}_{\mathrm{Rk}}}{\mathrm{R}_{\mathrm{N}}}$$

$$\sigma^2_{\frac{R_{EQ}}{nR_N}} = \frac{1}{n^2}\sum_{k=1}^{n}\frac{1}{R_N^2}\sigma^2_{R_R} = \frac{1}{n^2}\sum_{k=1}^{n}\sigma^2_{\frac{R_R}{R_N}} = \frac{1}{n}\sigma^2_{\frac{R_R}{R_N}} \quad \Rightarrow \quad \sigma_{\frac{R_{EQ}}{nR_N}} = \frac{1}{\sqrt{n}}\sigma_{\frac{R_R}{R_N}}$$

Note increasing the resistance by a factor of n dropped the normalized standard deviation by $\sqrt{n}$

Summary of Results

Structure	Nominal Resistance	Standard Deviation	Normalized Standard Deviation
R	R_N	$\sigma_R = \sigma_{R_R}$	$\sigma_{\frac{R_R}{R_N}}$
Ser nR	nR_N	$\sqrt{n}\sigma_{R_R}$	$\frac{1}{\sqrt{n}}\sigma_{\frac{R_R}{R_N}}$

Note increasing the resistance by a factor of n (identical in both value and structure) increased the standard deviation by $\sqrt{n}$

Note increasing the resistance by a factor of n decreased the normalized standard deviation by $\sqrt{n}$

Parallel Resistor Connection

$$\left.\begin{aligned} R_1 &= R_N + R_{R1} \\ R_2 &= R_N + R_{R2} \end{aligned}\right\}$$

$$R_{Par2} = \frac{\left(R_N + R_{R_{R1}}\right)\left(R_N + R_{R_{R2}}\right)}{2R_N + R_{R_{R1}} + R_{R_{R2}}}$$

$$R_{Par2} = \frac{R_N^2 + R_N\left(R_{R_{R1}} + R_{R_{R2}}\right) + R_{R_{R1}} R_{R_{R2}}}{2R_N + R_{R_{R1}} + R_{R_{R2}}}$$

$$R_{Par2} \cong \frac{R_N^2}{2R_N} \frac{1 + \dfrac{R_{R_{R1}} + R_{R_{R2}}}{R_N}}{1 + \dfrac{R_{R_{R1}} + R_{R_{R2}}}{2R_N}}$$

$$R_{Par2} \cong \frac{R_N}{2} \frac{1 + \dfrac{R_{R_{R1}} + R_{R_{R2}}}{R_N}}{1 + \dfrac{R_{R_{R1}} + R_{R_{R2}}}{2R_N}}$$

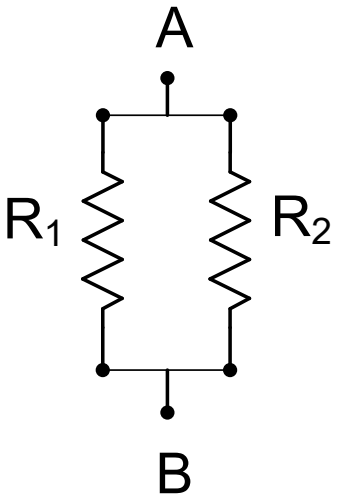

- The random variable R_{Par2} is highly nonlinear in R_{R1} and R_{R2}
- Some very good approximations of R_{Par2} can be made that linearize the expression

Parallel Resistor Connection

$$\left.\begin{aligned} R_1 &= R_N + R_{R1} \\ R_2 &= R_N + R_{R2} \end{aligned}\right\}$$

$$R_{Par2} \cong \frac{R_N}{2} \frac{1 + \dfrac{R_{R_{R1}} + R_{R_{R2}}}{R_N}}{1 + \dfrac{R_{R_{R1}} + R_{R_{R2}}}{2R_N}}$$

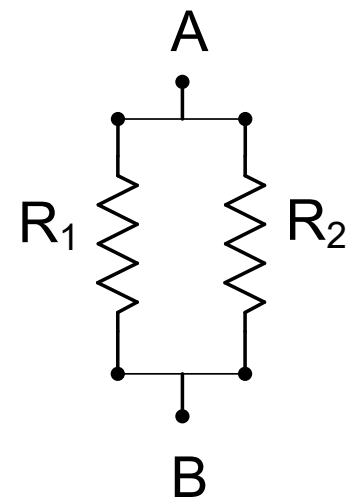

Recall that for x small, $\dfrac{1}{1+x} \cong 1 - x$

Thus

$$R_{Par2} \cong \frac{R_N}{2}\left(1 + \frac{R_{R_{R1}} + R_{R_{R2}}}{R_N}\right)\left[1 - \frac{R_{R_{R1}} + R_{R_{R2}}}{2R_N}\right] \cong \frac{R_N}{2} + \frac{1}{4}R_{R_{R1}} + \frac{1}{4}R_{R_{R2}}$$

From Theorem (identical in both value and structure)

$$\sigma^2_{R_{Par2}} = \frac{1}{16}\sigma^2_{R_R} + \frac{1}{16}\sigma^2_{R_R} \cong \frac{1}{8}\sigma^2_{R_R} \quad \Rightarrow \quad \sigma_{R_{Par2}} \cong \frac{1}{\sqrt{8}}\sigma_{R_R}$$

For n in parallel (identical in both value and structure), it follows that

$$\sigma_{R_{Parn}} \cong \frac{1}{n^{3/2}}\sigma_{R_R}$$

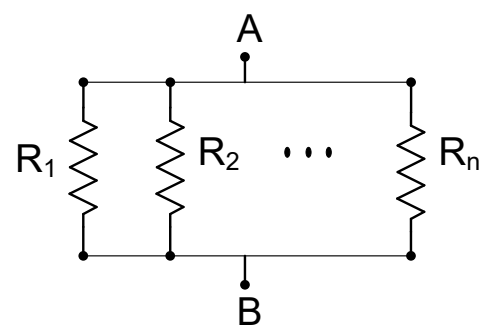

Parallel Resistor Connection

Consider normalized variance

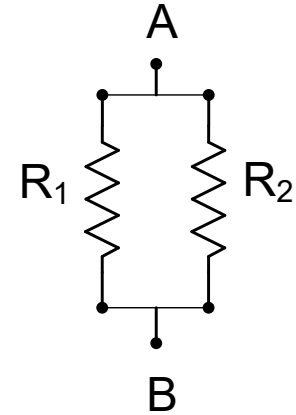

$$R_{Par-2} = \frac{R_N}{2}$$

$$\frac{R_{Par2}}{R_{Par2-Norm}} \cong 1 + \frac{1}{2}\frac{R_{R_{R1}}}{R_N} + \frac{1}{2}\frac{R_{R_{R2}}}{R_N}$$

From Theorem

$$\sigma^2_{\frac{R_{Par2}}{R_{Par2-Norm}}} \cong \frac{1}{4}\sigma^2_{\frac{R_{R_{R1}}}{R_N}} + \frac{1}{4}\sigma^2_{\frac{R_{R_{R1}}}{R_N}} = \frac{1}{2}\sigma^2_{\frac{R_{R_{R1}}}{R_N}}$$

$$\sigma_{\frac{R_{Par2}}{R_{Par2-Norm}}} \cong \frac{1}{\sqrt{2}}\sigma_{\frac{R_{R_{R1}}}{R_N}}$$

And for n in parallel (identical in both value and structure) $R_{Par-n} = \frac{R_N}{n}$

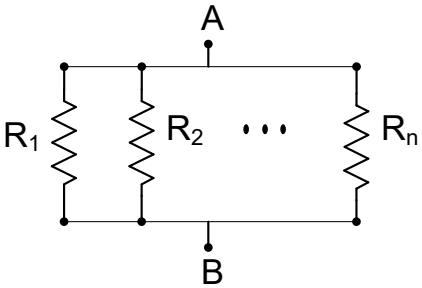

$$\sigma_{\frac{R_{Parn}}{R_{Parn-Norm}}} \cong \frac{1}{\sqrt{n}}\sigma_{\frac{R_R}{R_N}}$$

Note decreasing the resistance by a factor of n dropped the standard deviation by $\sqrt{n}$

Summary of Results

(for ideally identical in both value and structure)

Structure	Nominal Resistance	Standard Deviation	Normalized Standard Deviation
R	R_N	$\sigma_R = \sigma_{R_R}$	$\sigma_{\frac{R_R}{R_N}}$
Ser nR	nR_N	$\sqrt{n}\sigma_{R_R}$	$\frac{1}{\sqrt{n}}\sigma_{\frac{R_R}{R_N}}$
Par nR	$\frac{R_N}{n}$	$\frac{1}{n^{3/2}}\sigma_{R_R}$	$\frac{1}{\sqrt{n}}\sigma_{\frac{R_R}{R_N}}$

Note increasing or decreasing the resistance by a factor of n decreased the normalized standard deviation by $\sqrt{n}$

Note increasing the area by a factor of n decreased the normalized standard deviation by $\sqrt{n}$

What is the relationship between resistance, area, and standard deviation?

Consider parallel/series combination of 4 nominally identical resistors

(identical in both value and structure)

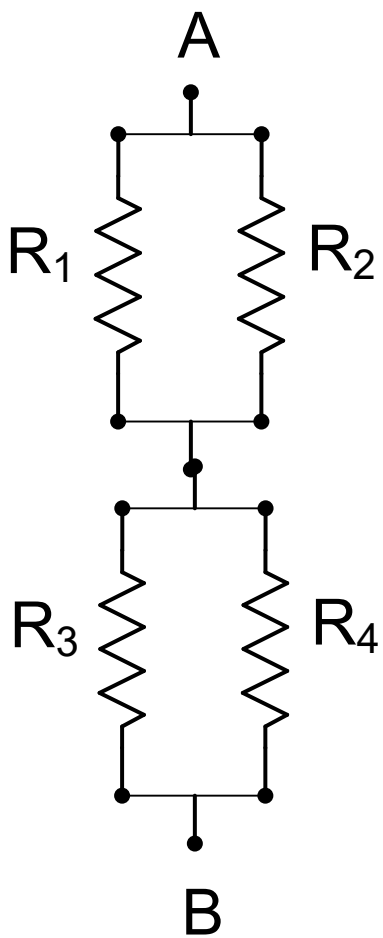

$$R_{EQ} = R_N$$

$$\sigma_{R_{EQ}} = \frac{\sigma_R}{2}$$

$$\sigma_{\frac{R_{EQ}}{R_N}} = \frac{1}{2}\sigma_{\frac{R}{R_N}}$$

Note making no change in the resistance reduced the standard deviation by 2

Note increasing the area by a factor of 4 dropped the standard deviation by 2

Summary of Results

Structure	Nominal Resistance	Standard Deviation	Normalized Standard Deviation
R	R_N	σ_{R_R}	$\sigma_{\frac{R_R}{R_N}}$
Ser nR	nR_N	$\sqrt{n}\sigma_{R_R}$	$\frac{1}{\sqrt{n}}\sigma_{\frac{R_R}{R_N}}$
Par nR	$\frac{R_N}{n}$	$\frac{1}{n^{3/2}}\sigma_{R_R}$	$\frac{1}{\sqrt{n}}\sigma_{\frac{R_R}{R_N}}$
Ser 2R	$2R_N$	$\sqrt{2}\sigma_{R_R}$	$\sigma_{\frac{R_R}{R_N}}/\sqrt{2}$
Par 2R	$\frac{R_N}{2}$	$\sigma_{R_R}/\sqrt{8}$	$\sigma_{\frac{R_R}{R_N}}/\sqrt{2}$
Ser 4R	$4R_N$	$2\sigma_{R_R}$	$\sigma_{\frac{R_R}{R_N}}/2$
Par 4R	$\frac{R_N}{4}$	$\sigma_{R_R}/8$	$\sigma_{\frac{R_R}{R_N}}/2$
Par/Ser 4R	R_N	$\sigma_{R_R}/2$	$\sigma_{\frac{R_R}{R_N}}/2$

Observation:

- In all cases, increasing the area by a factor of n decreases the normalized standard deviation by sqrt (n)

- These structures were all configured to have the same nominal current density. Without the equal current density requirement, results would differ

Example: Same nominal resistance but different current density and different variances

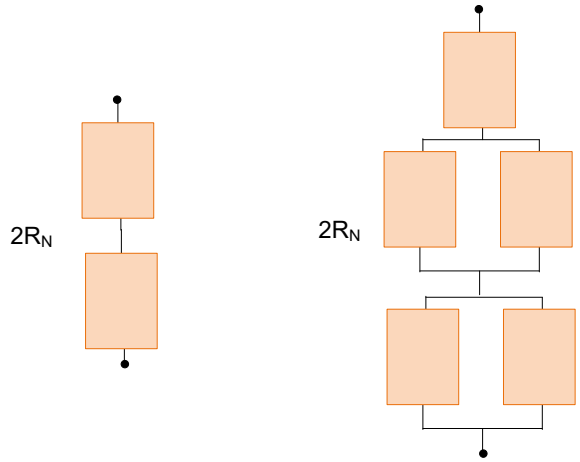

Have considered in previous examples the following scenarios

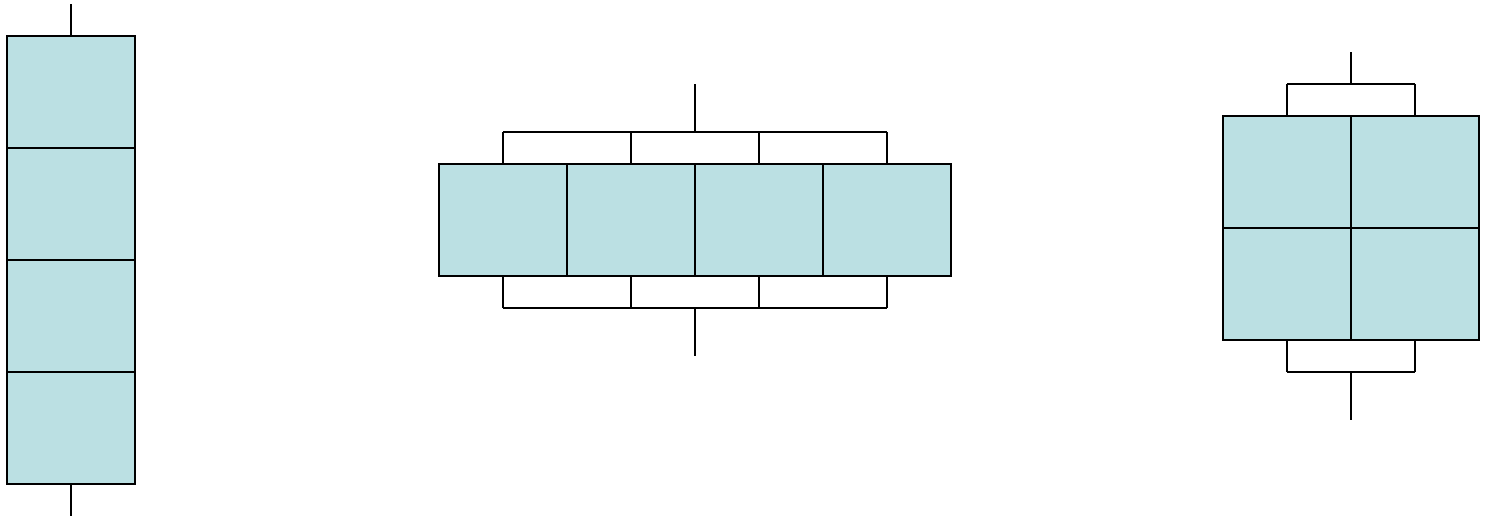

- Current density is uniform in each structure
- Aspect ratio plays no role in normalized performance
- Resistance value plays no role in normalized performance
- Only factor in normalized performance is area
- For a given resistance, each factor of 2 reduction in σ requires a factor of 4 increase in area

Key Implications:

If yield of a data converter is determined by matching performance, then every bit increment in performance will require <u>at least</u> a factor of 2 reduction in σ and correspondingly a factor of 4 increase in the area for the matching critical components if the same yield is to be obtained.

Formalize Resistor Characterization Concepts

Assume lithography is perfect, no gradient effects, and no contact resistance

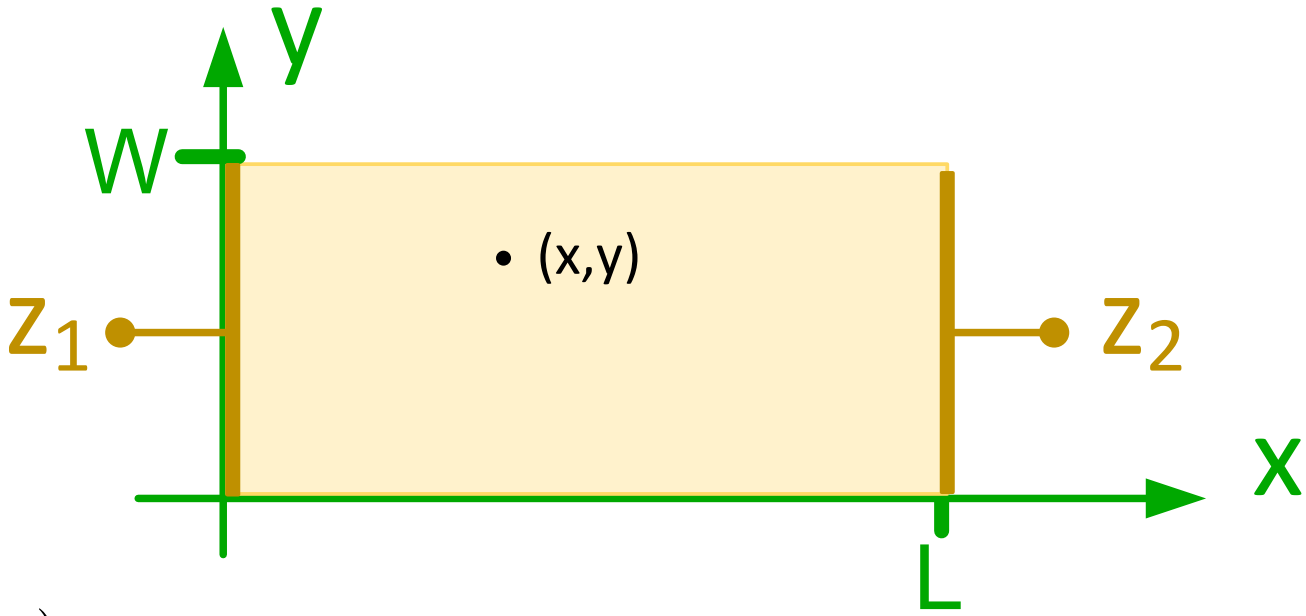

$R_{\square}(x,y)$: Sheet resistance at (x,y)

Most authors assume:

$$R_{\square EQ} = \frac{\int_A R_{\square}(x,y)\,dxdy}{A} \qquad A=WL$$

$$R_{z_1 z_2} = R_{\square EQ}\frac{L}{W}$$

We will make this same “standard” assumption

Counter example showing limitations of standard assumption

Assume sheet resistance constant in yellow region of value $R_{\square 1}$ and constant in purple region of value $R_{\square 2}$

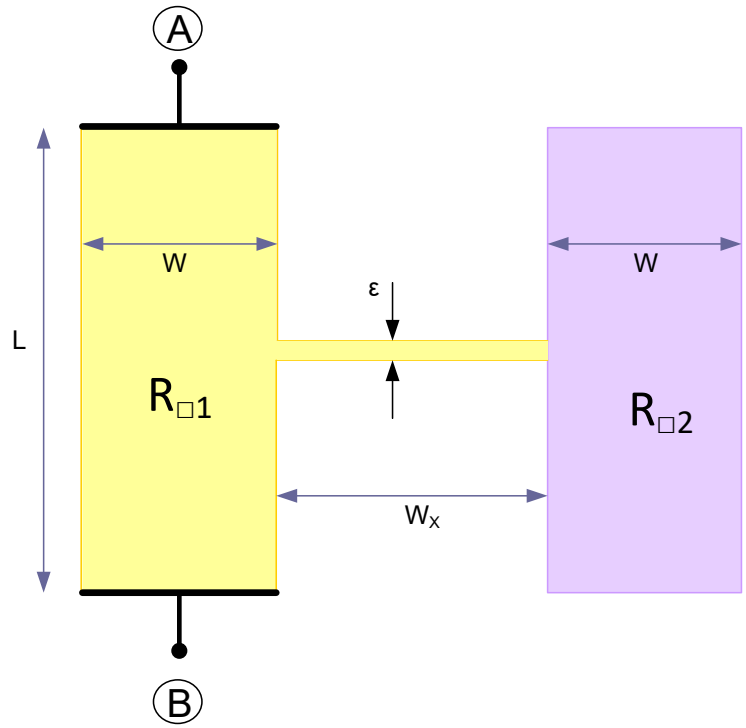

If ε is small and W_X large $\quad R_{\square EQ} \cong R_{\square 1} \quad \Rightarrow \quad R_{AB} \cong R_{\square 1}\left(\frac{L}{W}\right)$

but $\quad R_{\square EQ} \underset{\text{model}}{=} \dfrac{\int_A R_{\square}(x,y)\,dxdy}{A} \cong \dfrac{R_{\square 1}+R_{\square 2}}{2}$

If $R_{\square 1}$ and $R_{\square 2}$ are not equal, then $R_{\square EQ} \neq R_{\square 1}$

Though errors can be big, in practical processes for structures with identical current density throughout, the assumptions are probably pretty good !

Consider a square reference resistor of width 1μm

Define REF to be the resistance of the reference resistor. Since it is square of area $1u^2$, the equivalent sheet resistance of the reference resistor is equal to REF

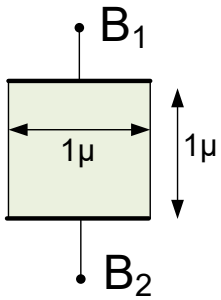

Assume the standard deviation of this reference resistor, <u>due to local random variations</u>, is σ_{REF}

Consider now a resistor of length L and width W

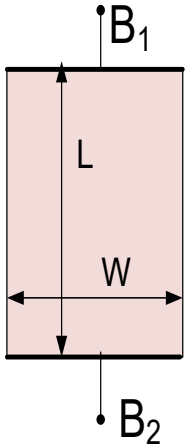

A=W•L

Define the equivalent sheet resistance of this resistor: $R_{\square EQ}$

$R_{\square EQ}$ is a random variable with a nominal value of $R_{\square N}$ and standard deviation that satisfies the expression

$$\sigma^2_{R_{\square EQ}} = \frac{\sigma^2_{REF}}{W \bullet L} = \frac{\sigma^2_{REF}}{A}$$

It follows that the value of the resistor R is given by the expression

$$R = R_{\square EQ} \bullet \frac{L}{W}$$

Thus

$$\sigma^2_R = \left(\frac{L}{W}\right)^2 \bullet \sigma^2_{R_{\square EQ}}$$

$$\sigma^2_R = \left(\frac{L}{W}\right)^2 \bullet \frac{\sigma^2_{REF}}{W \bullet L} = \sigma^2_{REF} \bullet \frac{L}{W^3}$$

Consider a resistor of width W and length L

$$\sigma_R^2 = \left(\frac{L}{W}\right)^2 \bullet \frac{\sigma_{REF}^2}{W \bullet L} = \sigma_{REF}^2 \bullet \frac{L}{W^3}$$

A=W•L

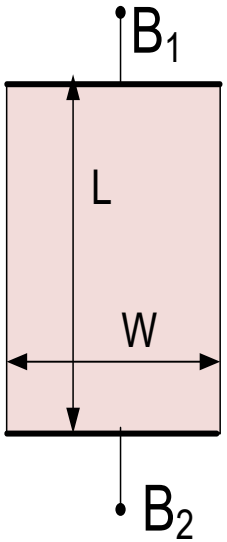

Note σ_R is dependent on resistance value

Consider now the normalized resistance $\frac{R}{R_N}$

where $R_N = R_{\square N}\frac{L}{W}$

It follows that

$$\sigma_{\frac{R}{R_N}}^2 = \left(\frac{1}{R_N^2}\right)\left(\sigma_{REF}^2 \frac{L}{W^3}\right) = \left(\frac{W^2}{R_{\square N}^2 L^2}\right)\left(\sigma_{REF}^2 \frac{L}{W^3}\right) = \left(\frac{1}{WL}\right)\left[\frac{\sigma_{REF}^2}{R_{\square N}^2}\right]$$

The term on the right in [ ] is the ratio of two process parameters so define the process parameter A_R by the expression $A_R = \frac{\sigma_{REF}}{R_{\square N}}$

A_R is more convenient to use than both σ_{REF} and $R_{\square N}$

Thus the normalized resistance is given by the expression

$$\sigma_{\frac{R}{R_N}}^2 = \frac{A_R^2}{WL} = \frac{A_R^2}{A}$$

Note $\sigma_{R/RN}$ is not dependent on resistance value

Will term A_R the "Pelgrom parameter" (though Pelgrom only presented results for MOS devices)

How can A_R be obtained?

Recall: $\sigma_{\frac{R}{R_N}} = \frac{A_R}{\sqrt{A}}$ where $A_R = \frac{\sigma_{REF}}{R_{\square N}}$

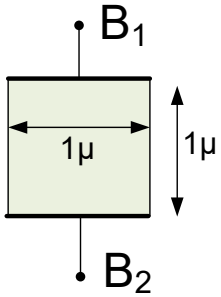

1. Obtain A_R from a PDK
2. Build a test structure to obtain A_R

Recall:

Let x be a random variable with mean μ and standard deviation σ and let $\vec{X} = \{x_i\}_{i=1}^{n}$ be n samples of the random variable x. Define μ_s to be the mean of the sample and σ_s to be the standard deviation of the sample. Then the statistic μ_s is an unbiased estimator of μ and the statistic $\sqrt{\frac{n}{n-1}}\sigma_s$ is an unbiased estimator of σ

The mean and variance of a <u>large</u> sample of a random variable are unbiased estimators of the mean and variance of the random variable itself

Strategy 1

$$A_R = \frac{\sigma_{REF}}{R_{\square N}}$$

1. Create a test circuit with a large number, n, of 1μ x 1μ resistors
2. Measure $R_1,\ldots R_n$
3. Calculate the sample standard deviation and sample mean as estimators

$$\hat{\sigma}_{\text{REF}} = \sigma_{\text{SAMPLE}}$$
$$\hat{R}_{\square N} = \mu_{\text{SAMPLE}}$$

$$\hat{A}_R \cong \frac{\sigma_{SAMPLE}}{\mu_{SAMPLE}}$$

Is this a good strategy for obtaining A_R?

No !

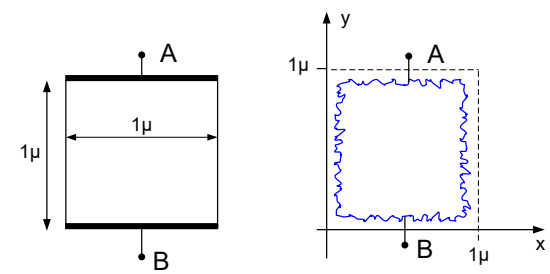

- Fringe effects will increase variance
- Gradient effects will skew the results
- Die-level and wafer-level variations will skew the results
- Contact resistances will skew results

Strategy 2

$$A_R = \frac{\sigma_{REF}}{R_{\square N}}$$

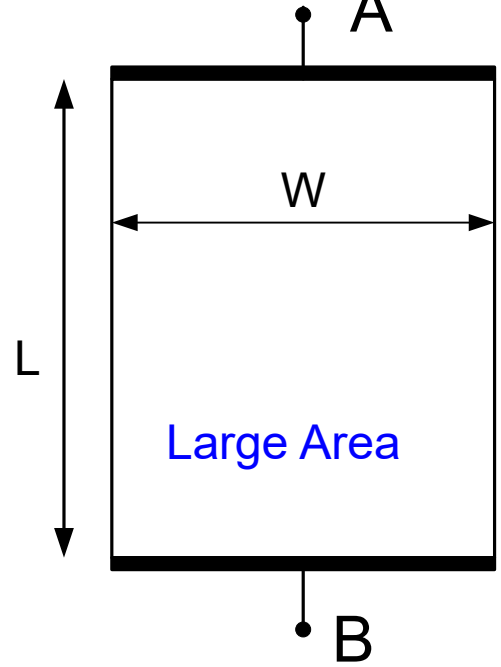

Create n large area test structures

$$\hat{R}_{\square N} \cong \frac{W}{L}\mu_{\text{SAMPLE}}$$

$$\sigma_R^2 = \sigma_{REF}^2 \bullet \frac{L}{W^3}$$

$$\hat{\sigma}_{REF} = \sigma_{R\_sample}\sqrt{\frac{W^3}{L}}$$

μ_{SAMPLE} is the mean resistance of the sample and σ_{R_sample} is the standard deviation of the sample

$$\hat{A}_R = \frac{\hat{\sigma}_{REF}}{\hat{R}_{\square N}} = \frac{\sigma_{R\_SAMPLE}\sqrt{LW}}{\mu_{SAMPLE}}$$

Is this a good strategy for obtaining A_R?

- Significantly reduces the boundary and contact resistance associated with the 1μ x 1μ structure
- If devices are not really close, other random variations will skew results that are supposed to characterize local random variations

Gradient Effects

σ_{REF}

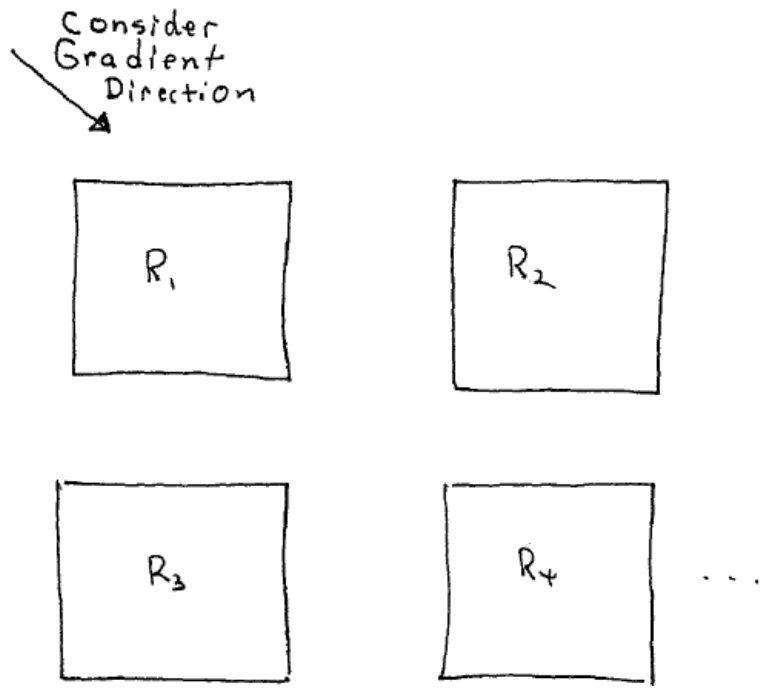

gradient effects will dramatically skew A_p extraction !

- need large test structures that are insensitive to gradient effects !
- consider a two-resistor test cell

How does the ratio matching of <u>two</u> resistors relate to the standard deviation of a single resistor?

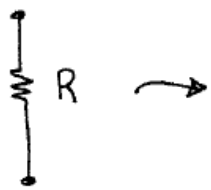

$\rightarrow \quad \sigma_R \quad \text{or} \quad \sigma_{\frac{R}{R_N}}$

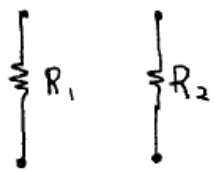

$R_{1N} = R_{2N} = R_N$

$$\Theta = \frac{R_1 - R_2}{R_N}$$

$$= \frac{R_N + R_{1R} - R_N - R_{2R}}{R_N}$$

$$\Theta = \frac{R_{1R} - R_{2R}}{R_N}$$

$$\therefore \sigma_\Theta^2 = \frac{1}{R_N^2}\left(\sigma_{R_{1R}}^2 + \sigma_{R_{2R}}^2\right)$$

$$\sigma_\Theta^2 = \frac{2\sigma_{R_R}^2}{R_N^2} \quad \rightarrow \quad \sigma^2_{\frac{\Delta R}{R_N}} = 2\sigma^2_{\frac{R}{R_N}}$$

Strategy 3 Measurement of A_R

$$\sigma_{\frac{\Delta R}{R_N}} = \sqrt{2}\sigma_{\frac{R}{R_N}} \qquad A_R = \sqrt{A} \bullet \sigma_{\frac{R}{R_N}}$$

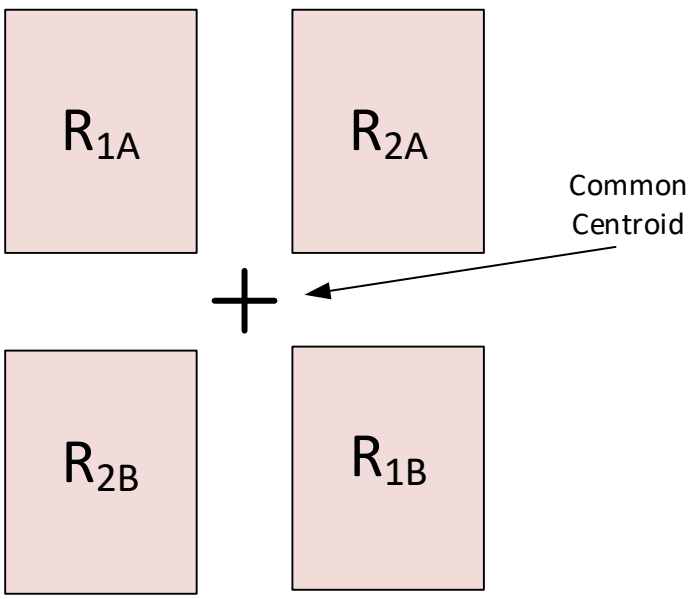

- Create 2 resistors, R_1 and R_2, using common centroid layouts

$R_1 = R_{1A} // R_{1B}$ $\quad R_2 = R_{2A} // R_{2B}$

A=area of one resistor

Define rv $\frac{\Delta R_{1:2}}{R_N}$

- Create a large number of these test structures and distribute across a die or wafer. Sample standard deviation is $\sigma_{\frac{\Delta R}{R_N}\ SAMPLE}$
  - calculate variance of these samples

$$\hat{A}_R = \sqrt{A} \bullet \sigma_{\frac{R}{R_N}\ SAMPLE} = \sqrt{A} \bullet \frac{1}{\sqrt{2}} \sigma_{\frac{\Delta R}{R_N}\ SAMPLE}$$

Strategy 3 Measurement of A_R

Large number of test structures across die, wafer, wafers, or process runs

$$\hat{A}_R = \sqrt{A} \bullet \frac{1}{\sqrt{2}} \sigma_{\frac{\Delta R}{R_N}\ SAMPLE}$$

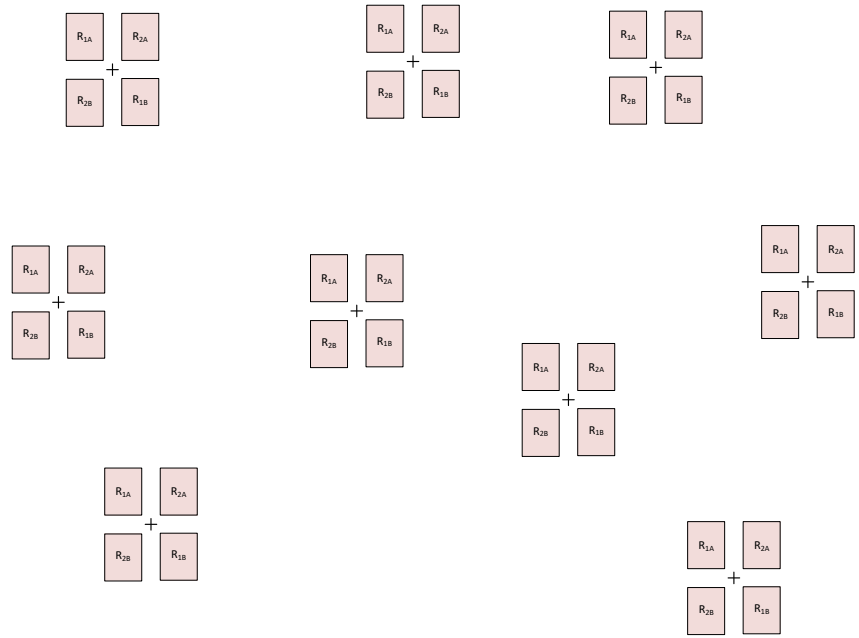

Will gradients skew the normalization by R_N?

No, effects will be minor

Assumption is made that A_R is not dependent upon gradients or even run-to-run variations

Designs must be robust to mismatch effects anyway so even small errors in A_R should not compromise design

Strategy 3 Measurement of A_R

Large number of test structures across die, wafer, wafers, or process runs

$$\widehat{A}_R = \sqrt{A} \bullet \frac{1}{\sqrt{2}} \sigma_{\frac{\Delta R}{R_N}} \; SAMPLE$$

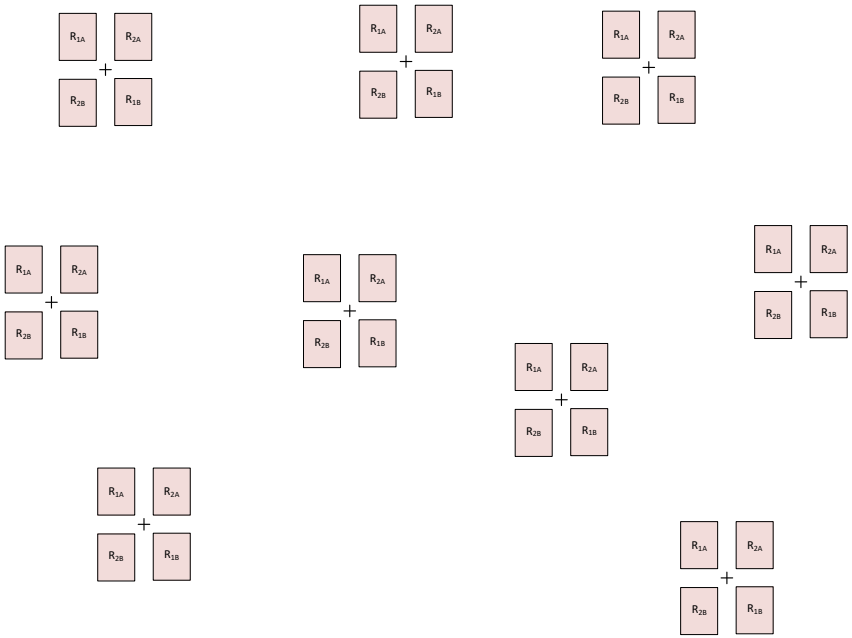

Is this a good strategy for obtaining A_R?

Strategy 4

Measurement of A_R

What about just taking a large number of resistors at multiple sites on a die, at multiple die locations on a wafer, and and on many wafers an wafer lots:

$$\left.\begin{aligned} \hat{\sigma}_{\frac{R}{R_N}} &= \sigma_{\frac{R}{R_N}\,SAMPLE} \\ \sigma_{\frac{R}{R_N}} &= \frac{A_R}{\sqrt{A}} \end{aligned}\right\} \quad \hat{A}_R = \sqrt{A}\,\sigma_{\frac{R}{R_N}\,SAMPLE}$$

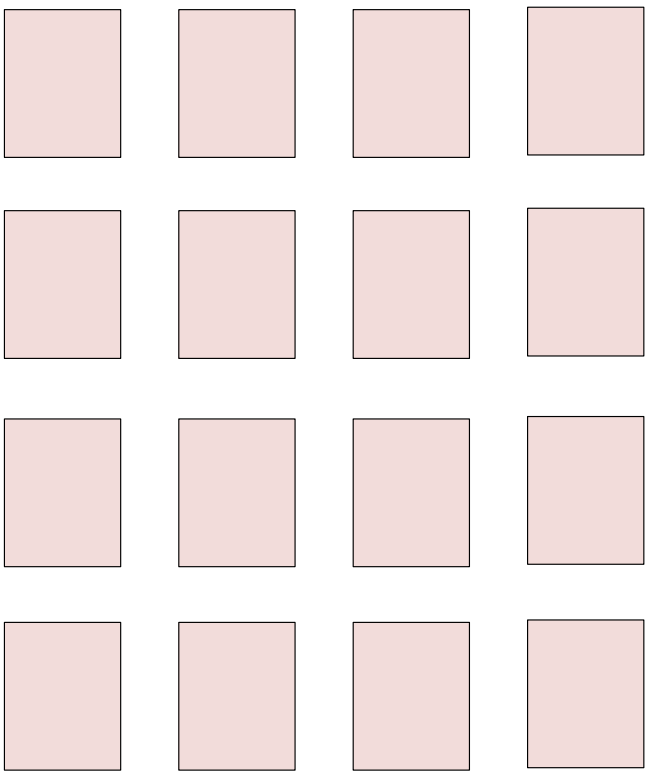

Is this a good strategy for obtaining A_R?

No! Highly dependent upon process variations, wafer variations, and gradients

Strategy 6

Measurement of A_R

What about having arrays of common centroid test structures and taking pair-wise differences?

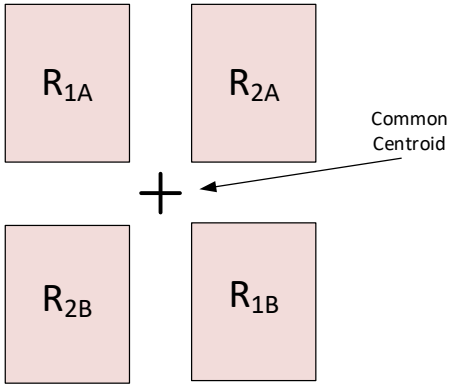

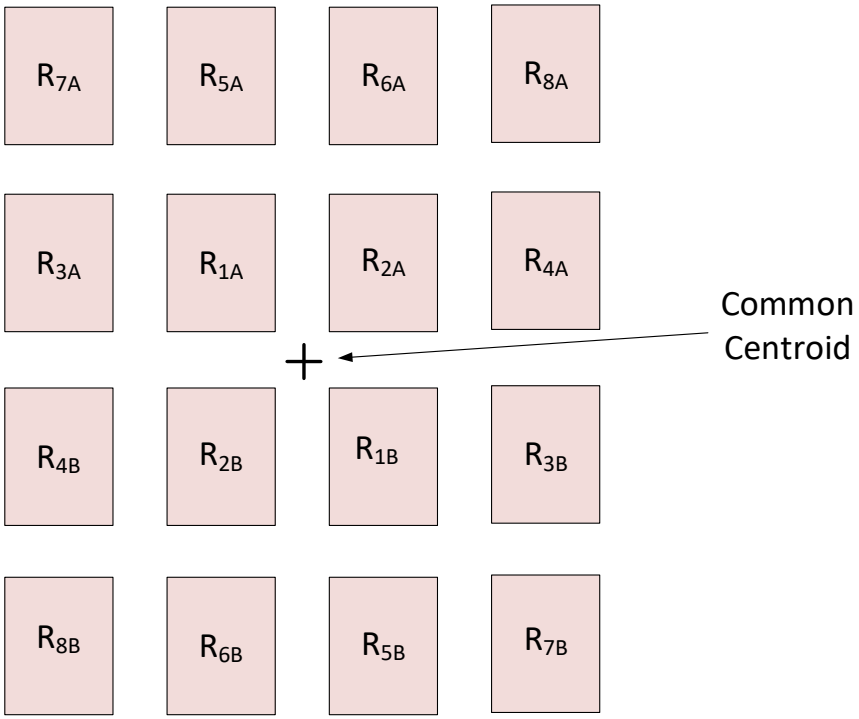

Is this a good strategy for obtaining A_R?

Yes! Get more useful information per unit area than with single pair structures

Measurement of A_R

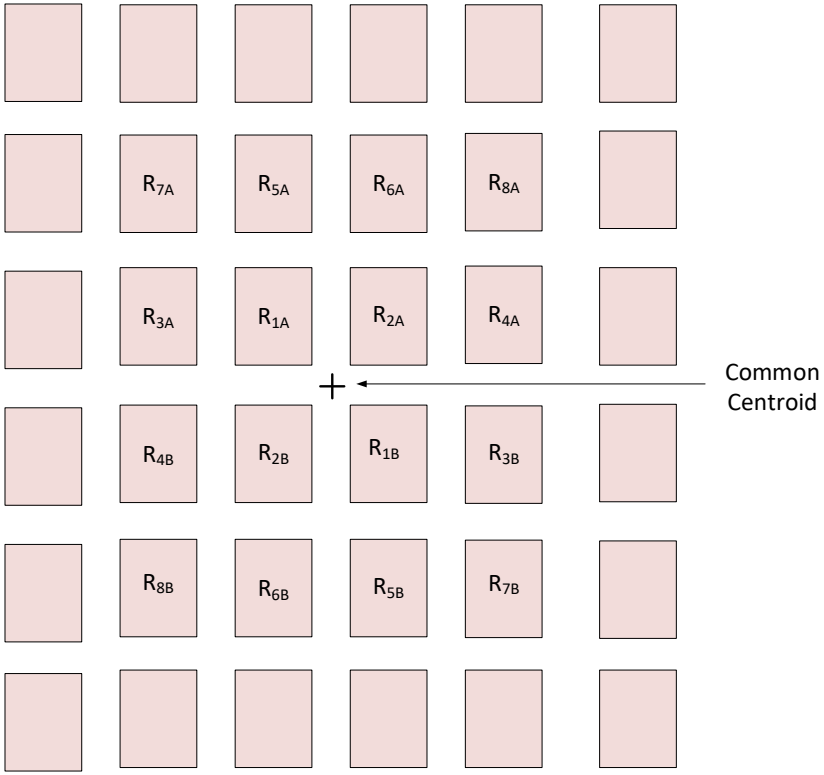

Regardless of which approach is followed, may need to have dummy devices that are nominally the same as the test devices surround test array

Sometimes two (or more) rings of dummy devices are used

Ratio Matching Effects in Data Converters

- Ratio matching is often critical in ADCs and DACs
- Accuracy and matching of gains is also critical in some data converters

Example: If a ratio of 10:1 is desired, determine the ratio matching accuracy relative to the standard deviation of a single resistor

---

Consider

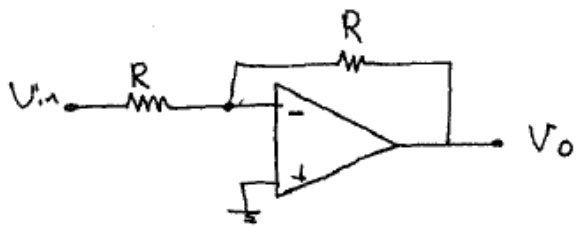

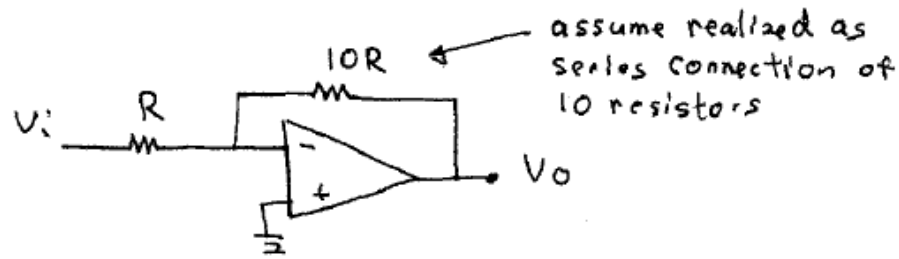

Question: what is the "yield" of these two amplifiers and how do they compare if a given gain accuracy requirement is specified?

Amplifier Gain Accuracy

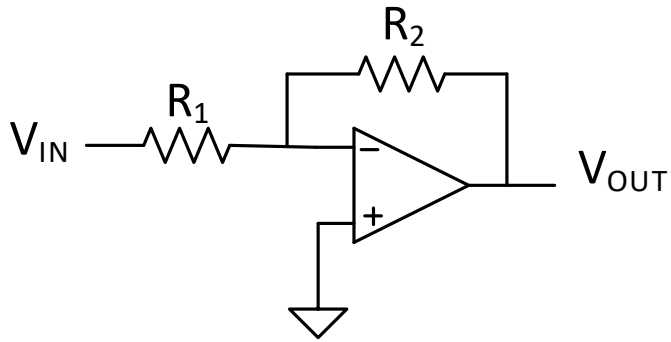

$$A_{CL} = -\frac{R_2}{R_1}$$

Does the ratio matching accuracy (A) depend upon the magnitude of the gain:

Consider:

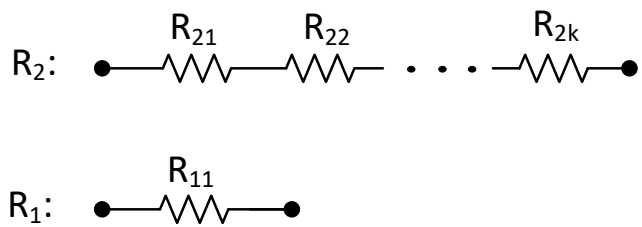

Assume ideally $R_{21}=R_{22}=\ldots=R_{2k}=R_{11}$ and the areas of the resistors are also ideally the same. Define A_{CL0} to be the nominal gain.

$$A_{CL0} = -\frac{R_{2NOM}}{R_{1NOM}} = k$$

Define θ to be the gain error

Amplifier Yield

Assume the closed-loop gain A_{CL} is a Gaussian RV with mean A_{CL0} and standard deviation σ_{ACL} where A_{CL0} is the nominal gain.

Assume yield is defined by amplifiers with a gain that satisfies the expression

$$A_{CL0}\left(1-\theta_X\right) < A_{CL} < A_{CL0}\left(1+\theta_X\right)$$

$$Y = P\{A_{CL0}(1-\theta_X) < A_{CL} < A_{CL0}\left(1+\theta_X\right)\}$$

$$Y = \int_{x=A_{CL0}(1-\theta_X)}^{x=A_{CL0}(1+\theta_X)} f_{ACL}\left(x\right)dx$$

$$Y = \int_{z=\frac{A_{CL0}(1-\theta_X)-A_{CL0}}{\sigma_{ACL}}}^{z=\frac{A_{CL0}(1+\theta_X)-A_{CL0}}{\sigma_{ACL}}} f_{N(0,1)}\left(z\right)dz$$

$$Y = \int_{z=\frac{-\theta_X A_{CL0}}{\sigma_{ACL}}}^{z=\frac{\theta_X A_{CL0}}{\sigma_{ACL}}} f_{N(0,1)}\left(z\right)dz$$

Amplifier Yield

Assume the closed-loop gain A_{CL} is a Gaussian RV with mean A_{CL0} and standard deviation σ_{ACL} where A_{CL0} is the nominal gain

Assume yield is defined by amplifiers with a gain that satisfies the expression

$$A_{CL0}\left(1-\theta_X\right) < A_{CL} < A_{CL0}\left(1+\theta_X\right)$$

$$Y = \int_{z=\frac{-\theta_X A_{CL0}}{\sigma_{ACL}}}^{z=\frac{\theta_X A_{CL0}}{\sigma_{ACL}}} f_{N(0,1)}\left(z\right)dz$$

$$Y = 2F_{N(0.1)}\left(\frac{\theta_X A_{CL0}}{\sigma_{ACL}}\right)-1$$

$$Y = 2F_{N(0.1)}\left(\frac{\theta_X}{\frac{\sigma_{ACL}}{A_{CL0}}}\right)-1$$

Thus to obtain yield need to obtain σ_{ACL} or $\frac{\sigma_{ACL}}{A_{CL0}}$

Amplifier Gain Accuracy

Gain error $\theta = A_{CL0} - A_{CL}$

It follows that $\sigma_\theta = \sigma_{ACL}$

Thus need to obtain σ_θ

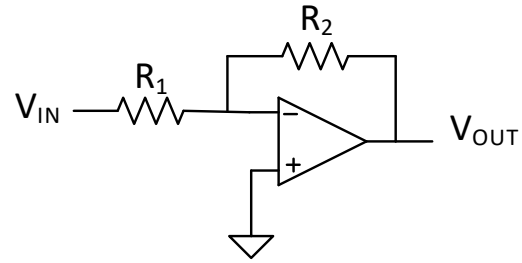

$$\theta = \left.\frac{R_2}{R_1}\right|_{NOM} - \left.\frac{R_2}{R_1}\right|_{ACT}$$

$$\theta = \mathrm{k} - \frac{\sum_{i=1}^{k} R_{2i}}{R_{11}}$$

$$R_{2i} = R_0 + R_{R2i}$$

$$R_{11} = R_0 + R_{R1}$$

$$\theta = \mathrm{k} - \frac{kR_0 + \sum_{i=1}^{k} R_{R2i}}{R_0\left(1 + \frac{R_{R11}}{R_0}\right)}$$

$$\theta = \mathrm{k} - \frac{k + \sum_{i=1}^{k} \frac{R_{R2i}}{R_0}}{\left(1 + \frac{R_{R11}}{R_0}\right)}$$

$$\theta = \mathrm{k} - \left[k + \sum_{i=1}^{k} \frac{R_{R2i}}{R_0}\right]\left(1 - \frac{R_{R11}}{R_0}\right)$$

$$\theta = k\frac{R_{R11}}{R_0} - \sum_{i=1}^{k} \frac{R_{R2i}}{R_0}$$

Amplifier Gain Accuracy

$$\theta = k\frac{R_{R11}}{R_0} - \sum_{i=1}^{k}\frac{R_{R2i}}{R_0}$$

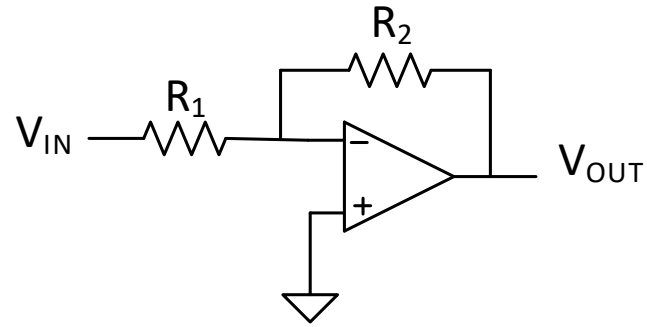

$$\sigma_\theta^2 = k^2\sigma^2_{\frac{R_{R11}}{R_0}} + \sum_{i=1}^{k}\sigma^2_{\frac{R_{R2i}}{R_0}}$$

$$\sigma_\theta^2 = k^2\sigma^2_{\frac{R_{R11}}{R_0}} + k\sigma^2_{\frac{R_{R2i}}{R_0}}$$

If k=1 $\quad \sigma_\theta = \sigma_{\frac{R_{Ri}}{R_0}}\sqrt{2}$

If k=10 $\quad \sigma_\theta = \sigma_{\frac{R_{Ri}}{R_0}}\sqrt{101} \cong 10.5\sigma_{\frac{R_{Ri}}{R_0}}$

$$\sigma_\theta^2 = \left(k^2 + k\right)\sigma^2_{\frac{R_{Ri}}{R_0}}$$

$$\sigma_\theta = \sigma_{\frac{R_{Ri}}{R_0}}\sqrt{k^2 + k}$$

Recall: $\sigma^2_{\frac{R}{R_N}} = \frac{A_R^2}{WL} = \frac{A_R^2}{A}$ $\Rightarrow$ $Y = 2F_{N(0.1)}\left(\frac{\theta_X A_{CL0}}{\sigma_{ACL}}\right) - 1$

Amplifier Gain Accuracy

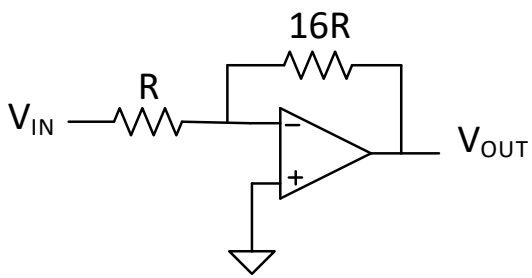

Option 1

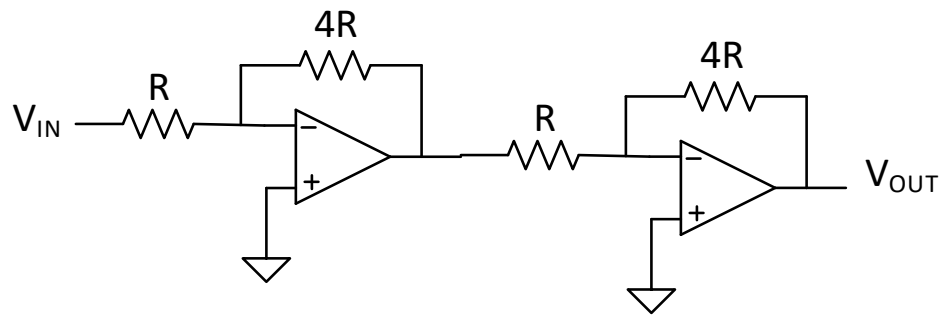

Option 2

Which will have the lowest σ?

Note: R_{TOT}= 17R for Option 1; 10R for Option 2

Amplifier Gain Accuracy

Many different ways to achieve a given gain with a given resistor area

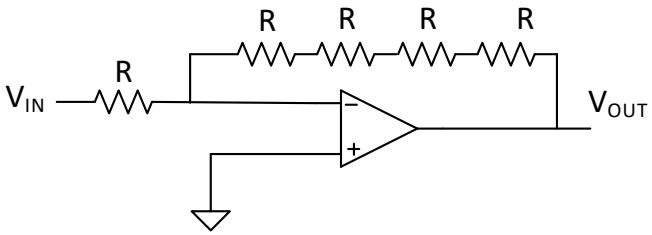

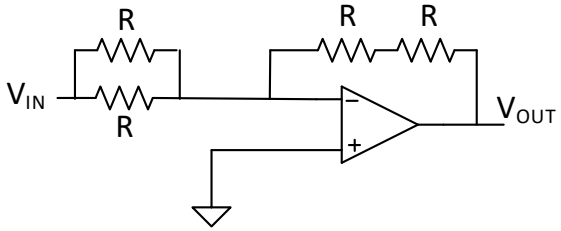

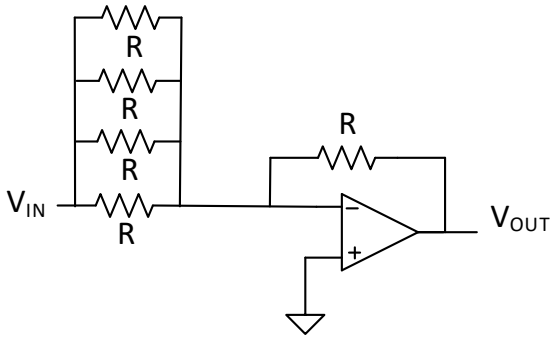

Which will have the best yield?

Stay Safe and Stay Healthy !

End of Lecture 9